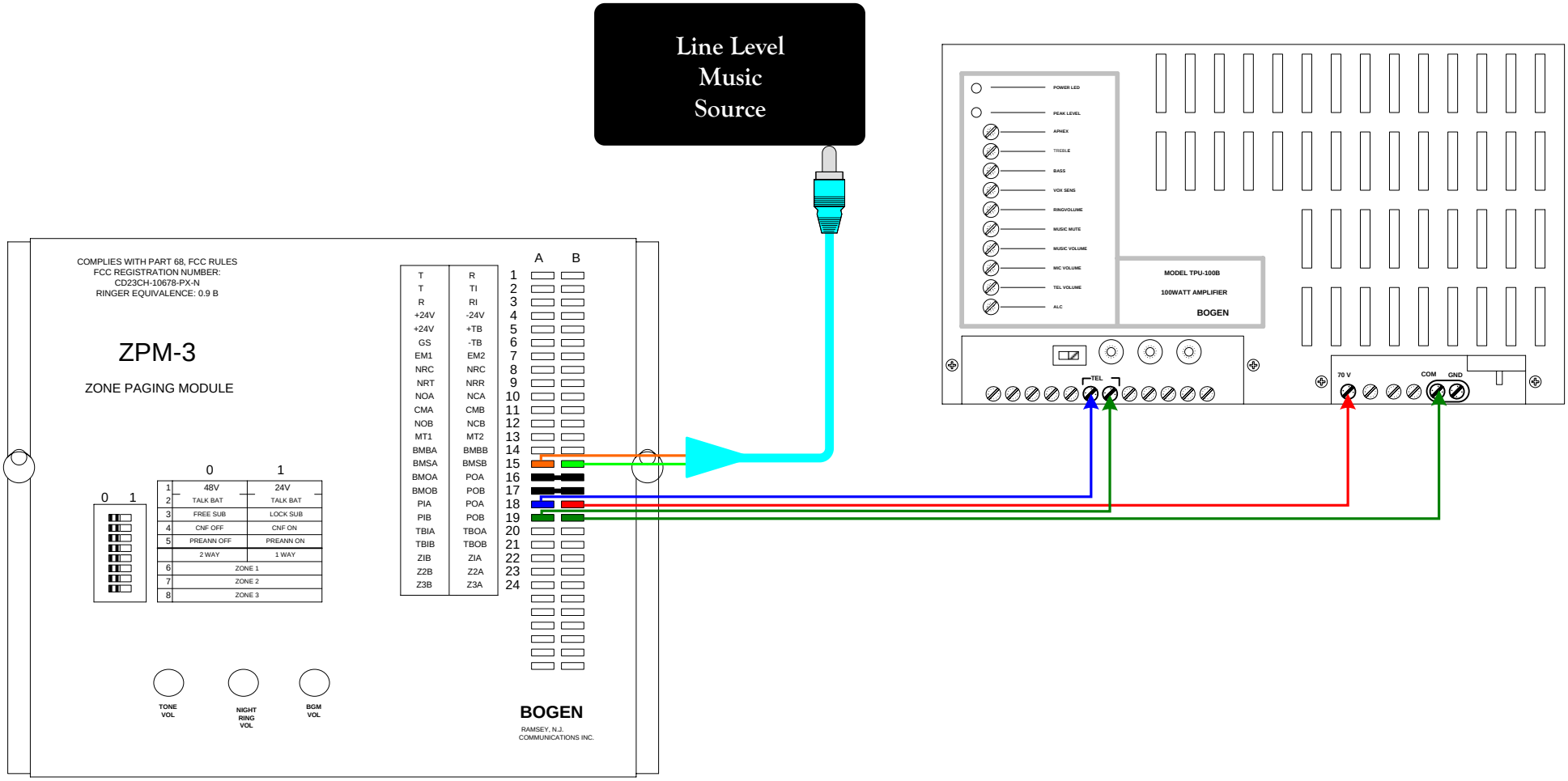ZPM3, Single Amplifier, Background Music